Flush mount template

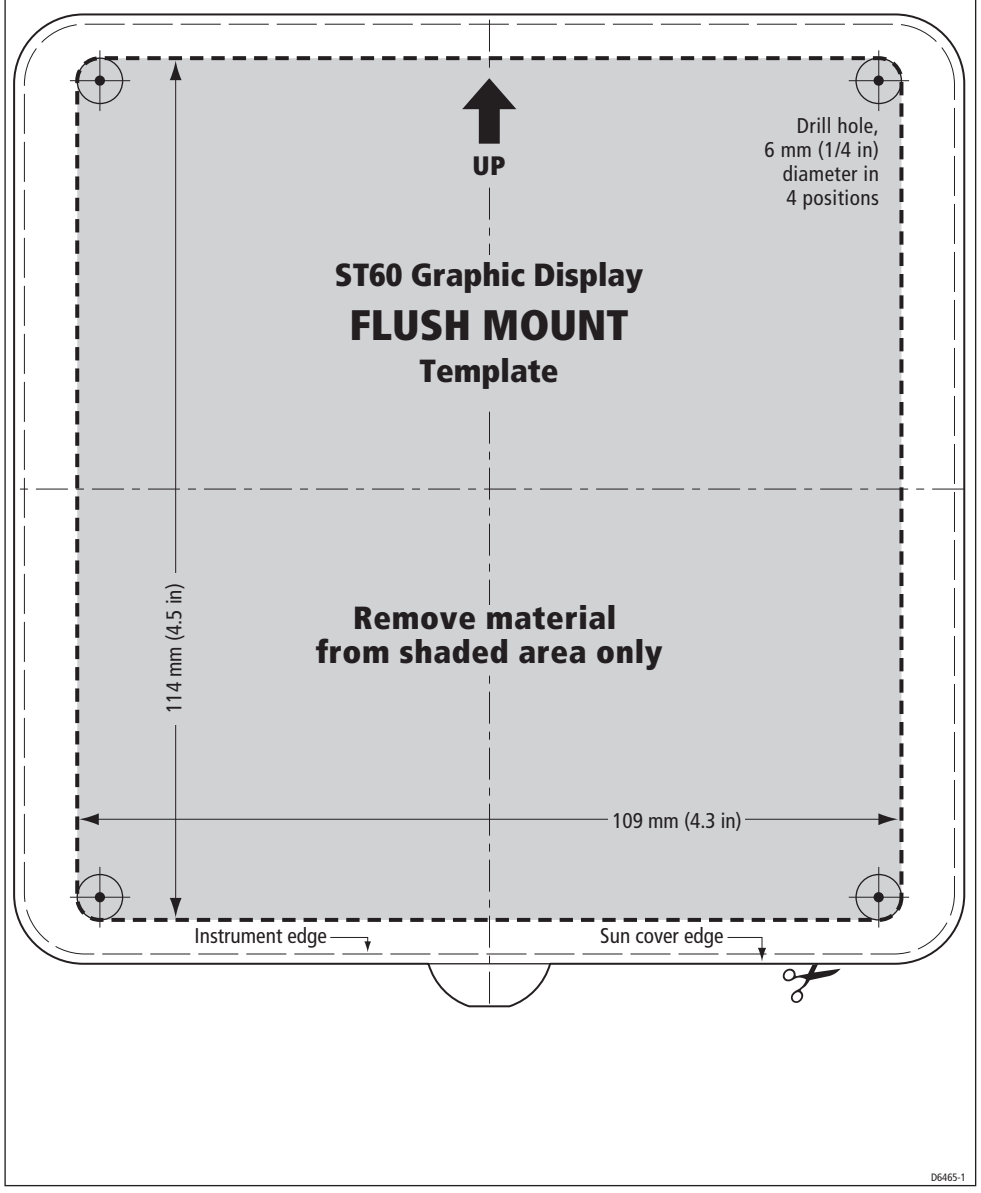

ST60 Graphic Display Installation Guide

Raymarine®
www.raymarine.com

Parts supplied

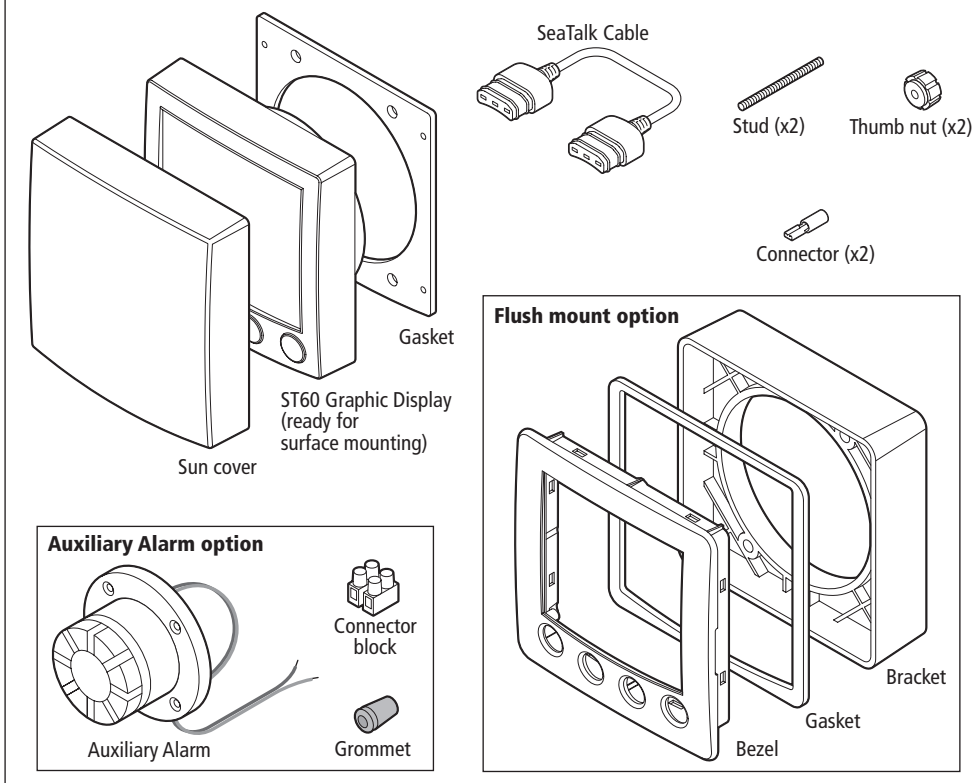

Tools required

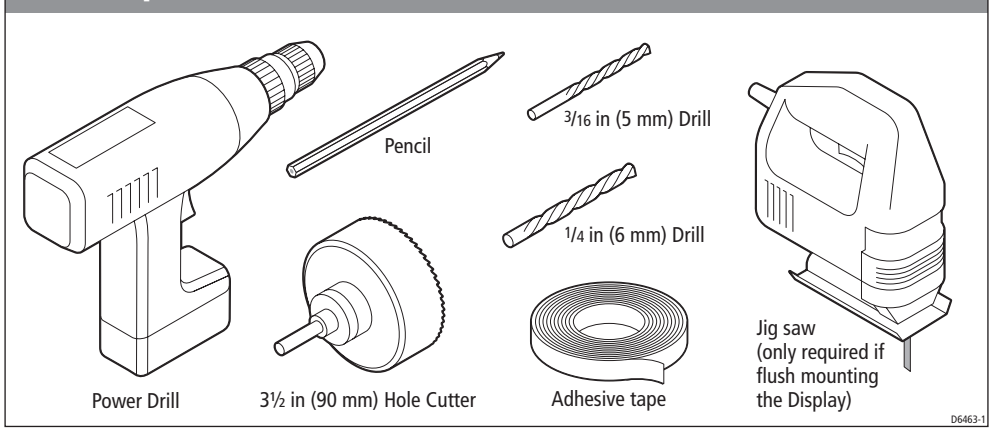

Connection details

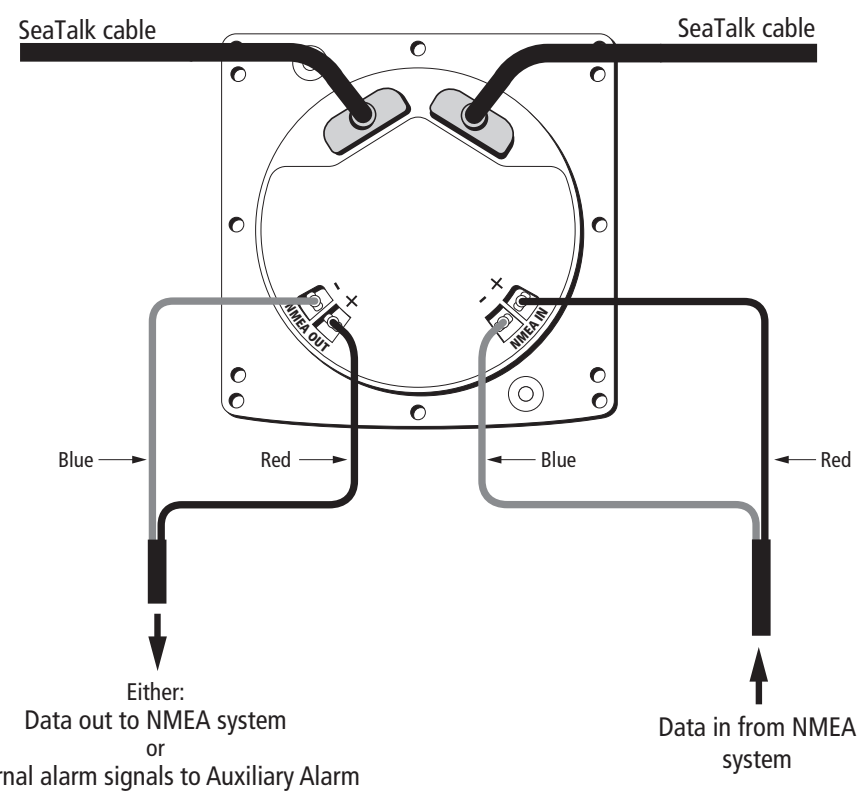

Use the procedures in the *ST60 Graphic Display Commissioning Guide* to set the function for the **NMEA OUT** connector.

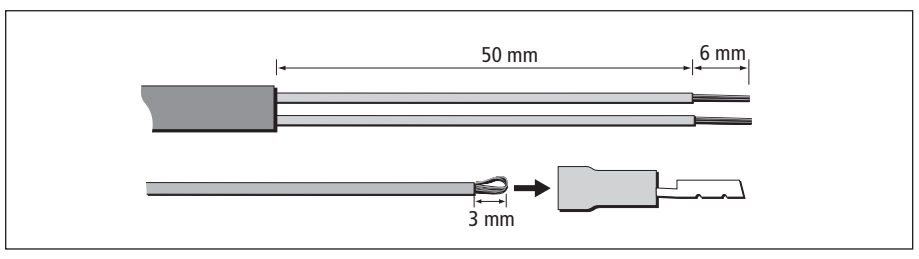

Site requirements

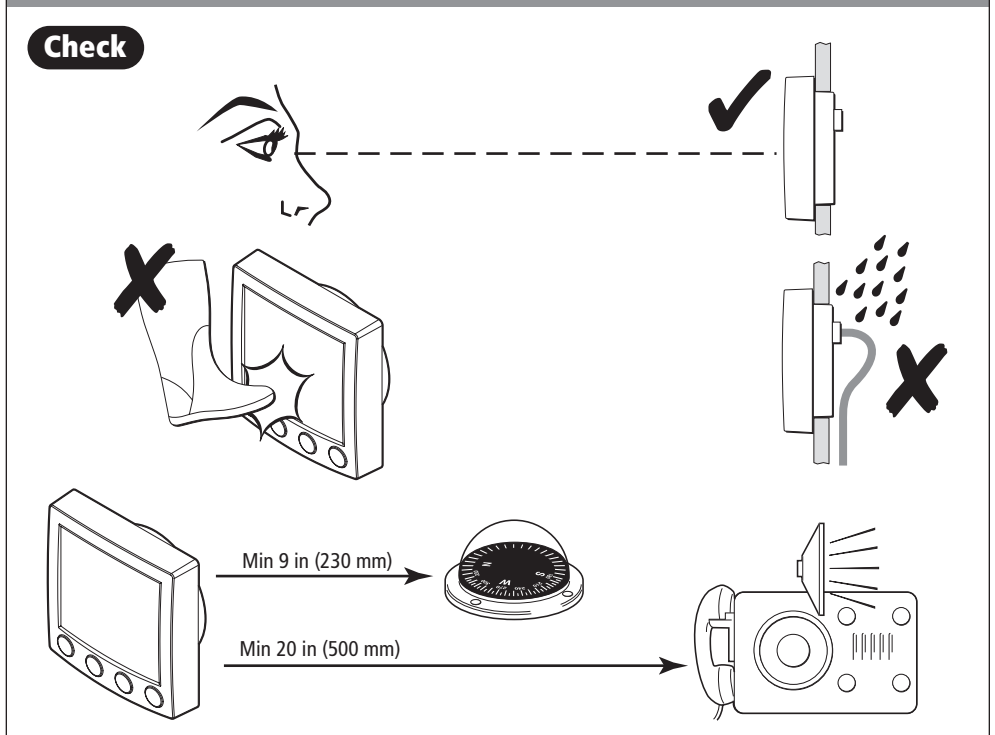

Running cables

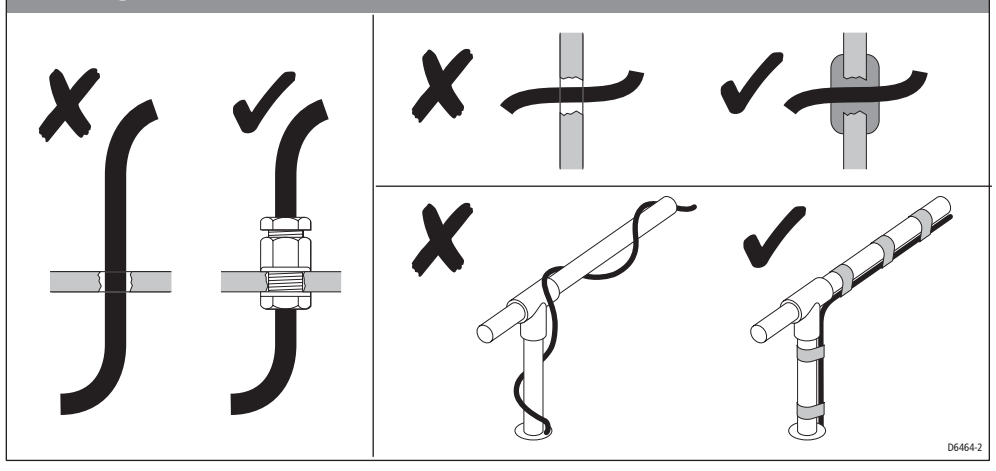

Raymarine Ltd, Portsmouth, Hampshire, UK PO3 5TD
Raymarine Inc. Nashua, NH 03063-4219, USA
+44 (0) 23 9269 3611
Toll Free: 800-539-5539
+1 603-881-5200

Recyclable Material - Please dispose of responsibly.

87022-1

Surface mount display

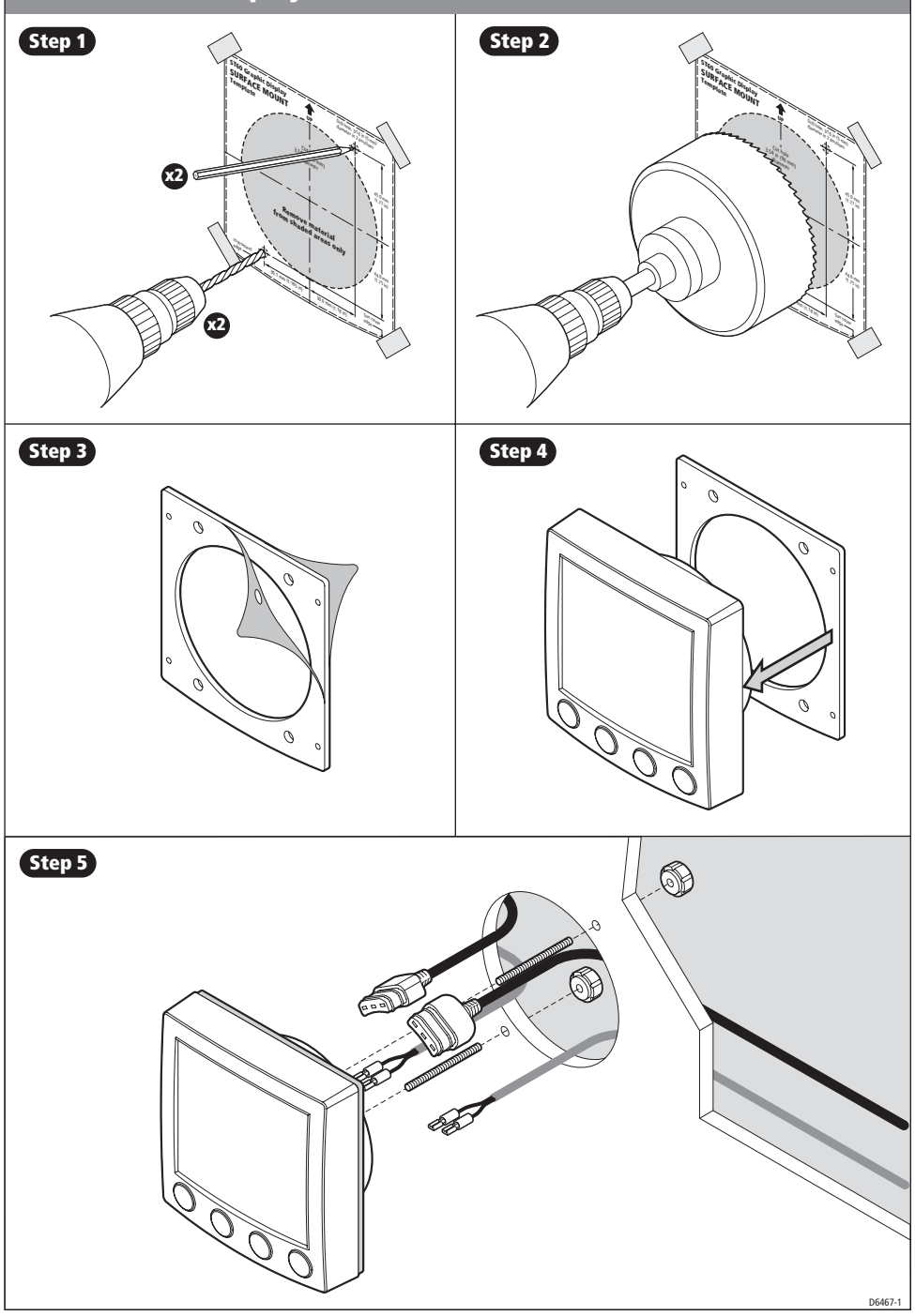

Surface mount template

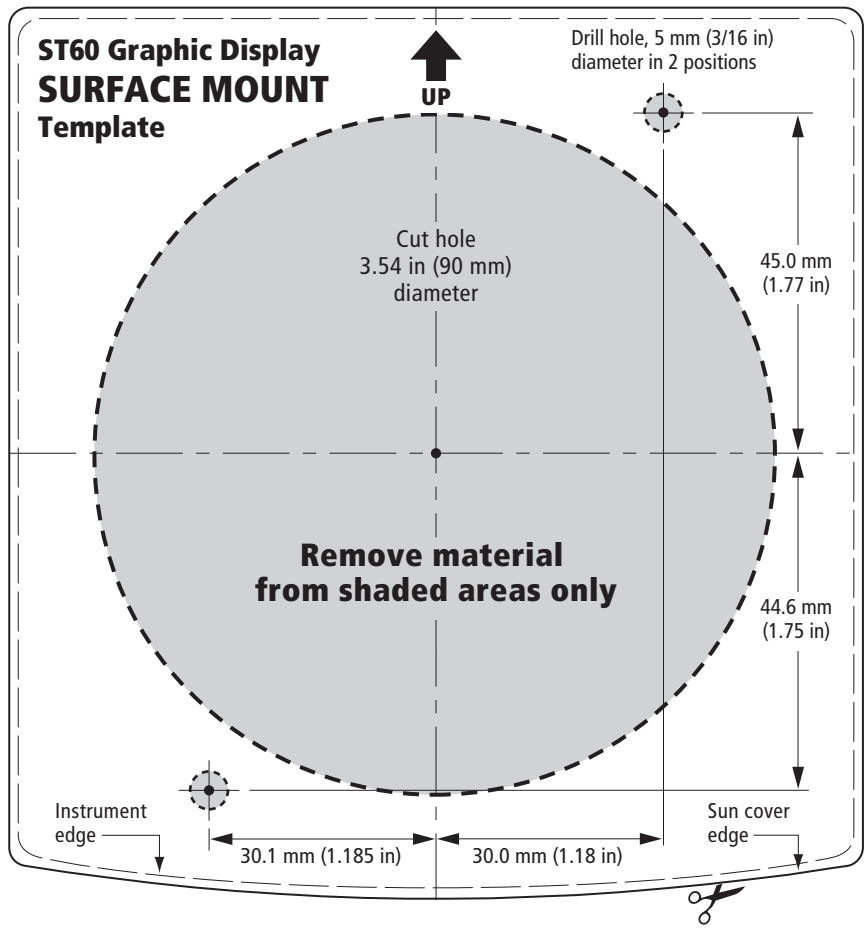

Flush mount display

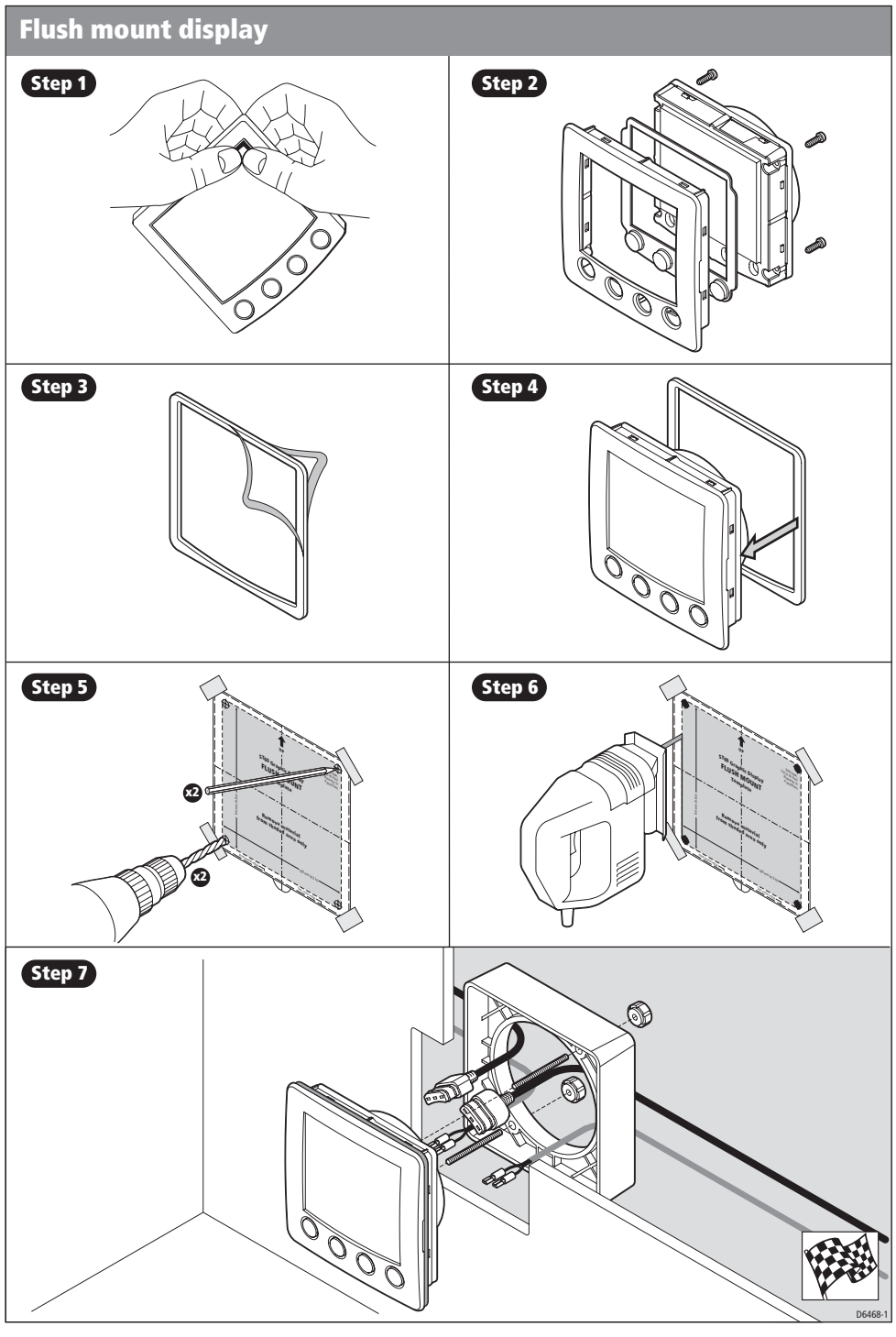
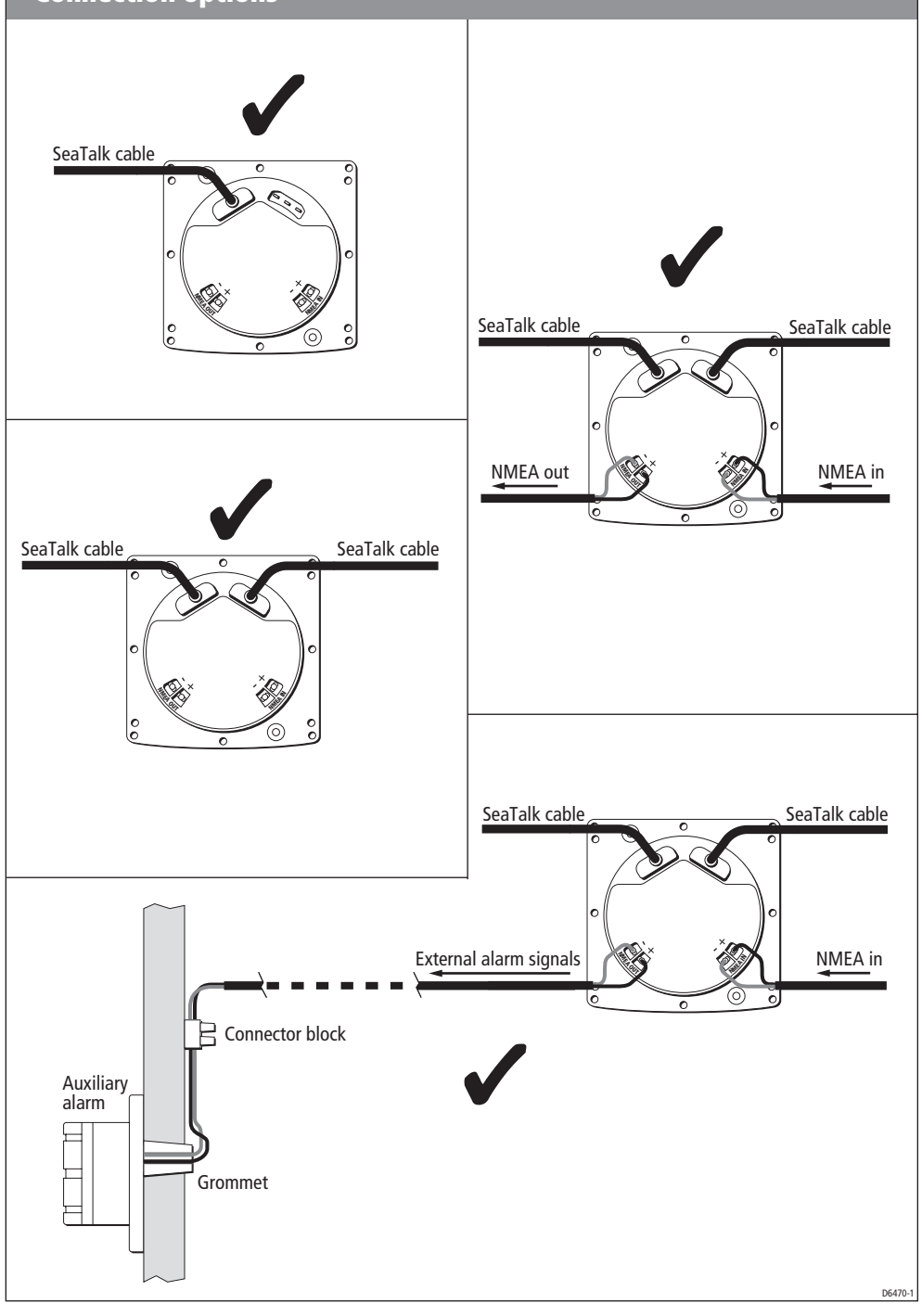
Connection options